PIONEER PUMP

Pioneer Prime Sound Attenuated Diesel-Driven Centrifugal Pump Trailer Package

SAPP108S17L71-1706J-E93TA

PUMP SPECIFICATIONS

Size	10" x 8" (254 x 200 mm)
Impeller Diameter	17.5" (445 mm)
Max Flow	6,350 gpm (1,475 m^3/h)
Max Head	405 feet (123 meters)
Solids Size	3.5" (90 mm)
Max. Operating Temp.	200 °F (93 °C)
Max. Operating Press.	260 psi (1800 kPa)

ENGINE SPECIFICATIONS

FT4 Engine Type	1706J-E93TA - 335 HP
Displacement	550 cu. in. (9.3 l)
Fuel Consumption	19.7 gph (74.4 l/h) @ 1800 rpm
Continuous HP	335 HP (250kW) @ 1800 rpm
Peak HP Rating	456 HP (340 kW)
FT4 Specifics (Def or No Def, DOC, SCR, etc.)	DOC, DPF, SCR, EGR
Safety Shut-Down Switches	Low oil press., high temp., v-belt failure
Instrument Panel	Oil pressure gauge, ampmeter, hourmeter, tachometer

PIONEER PRIME PRIMING SYSTEM

Priming System	Mechanically driven diaphragm-style vacuum pump
Air Removal Cap.	50 cfm (.02 cms)
Priming Chamber	Positive sealing air separation w/stainless steel components
Discharge Check Valve	Swing style; ductile iron w/nitrile disc
Run Dry System	Oil-lubricated mech. seal allows pump to run completely dry without damage

FEATURES AND BENEFITS

- Indefinite run-dry capability
- Extreme flow technology
- Environmentally safe priming system: Pioneer Prime
- Auto-start controls
- Skid options available

OPTIONS AND ACCESSORIES

Parts Kits No.	Mechanical Seal Kit: 372000110 | Bearing Frame Kit: 373000110
Instrument Compatibility	Transducer
Telemetry Ready	Options Available

PACKAGE SPECIFICATIONS

Fuel Capacity	210 gal (795 L)
Control Panel	LOFA CP750
Operating Speed (Min. / Max.)	1,200 / 2,000 rpm
Instrument Compatibility	High/low level floats
Trailer Brakes	Electric
Enclosure dB(A) Rating	69 dB(A) @ 23 feet (7 meters)
Optional Adders	Surge brakes, corner jacks, tongue-mounted tool box, wheel chocks, interior/exterior lighting

MATERIALS OF CONSTRUCTION

Material	**Standard Construction**
Impeller	CA6NM Stainless Steel
Shaft	17-4 PH Stainless Steel
Wear Ring	ASTM A48 Class 40 Gray Iron
Suction Cover	Ductile Iron ASTM A536 65-45-12
Volute	Ductile Iron ASTM A536 65-45-12
Brac-Plate/Bracket	Ductile Iron ASTM A536 65-45-12
Mechanical Seal	Silicon Carbide rotating and Tungsten Carbide stationary

Franklin Electric

MECHANICAL DIMENSIONS

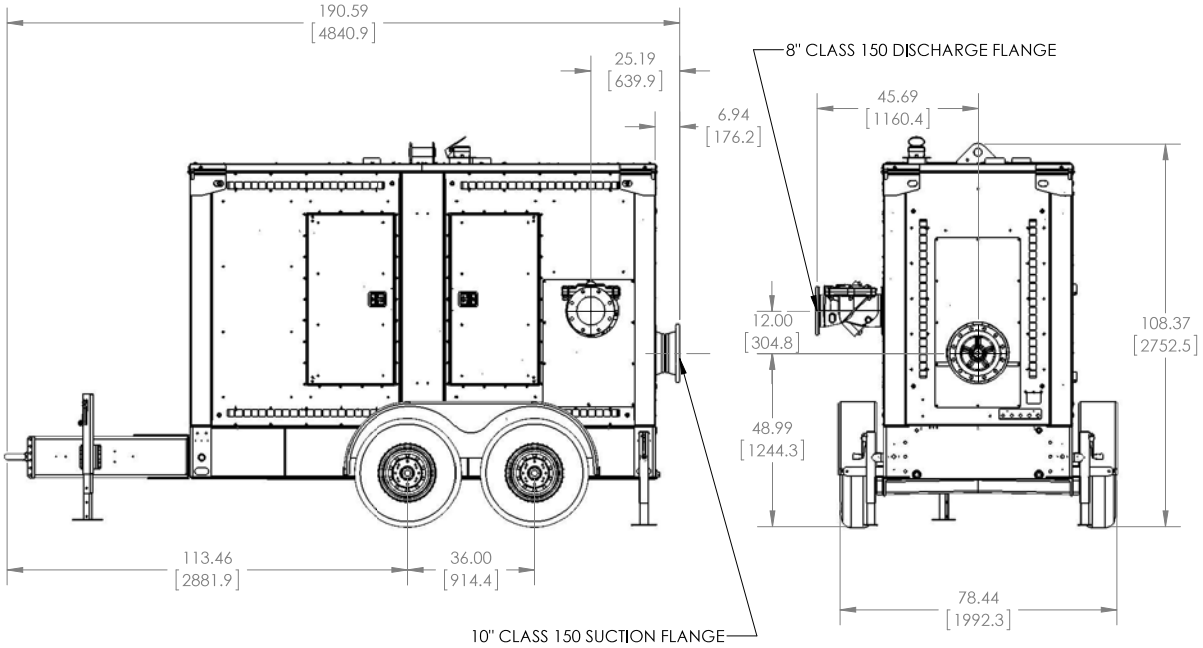
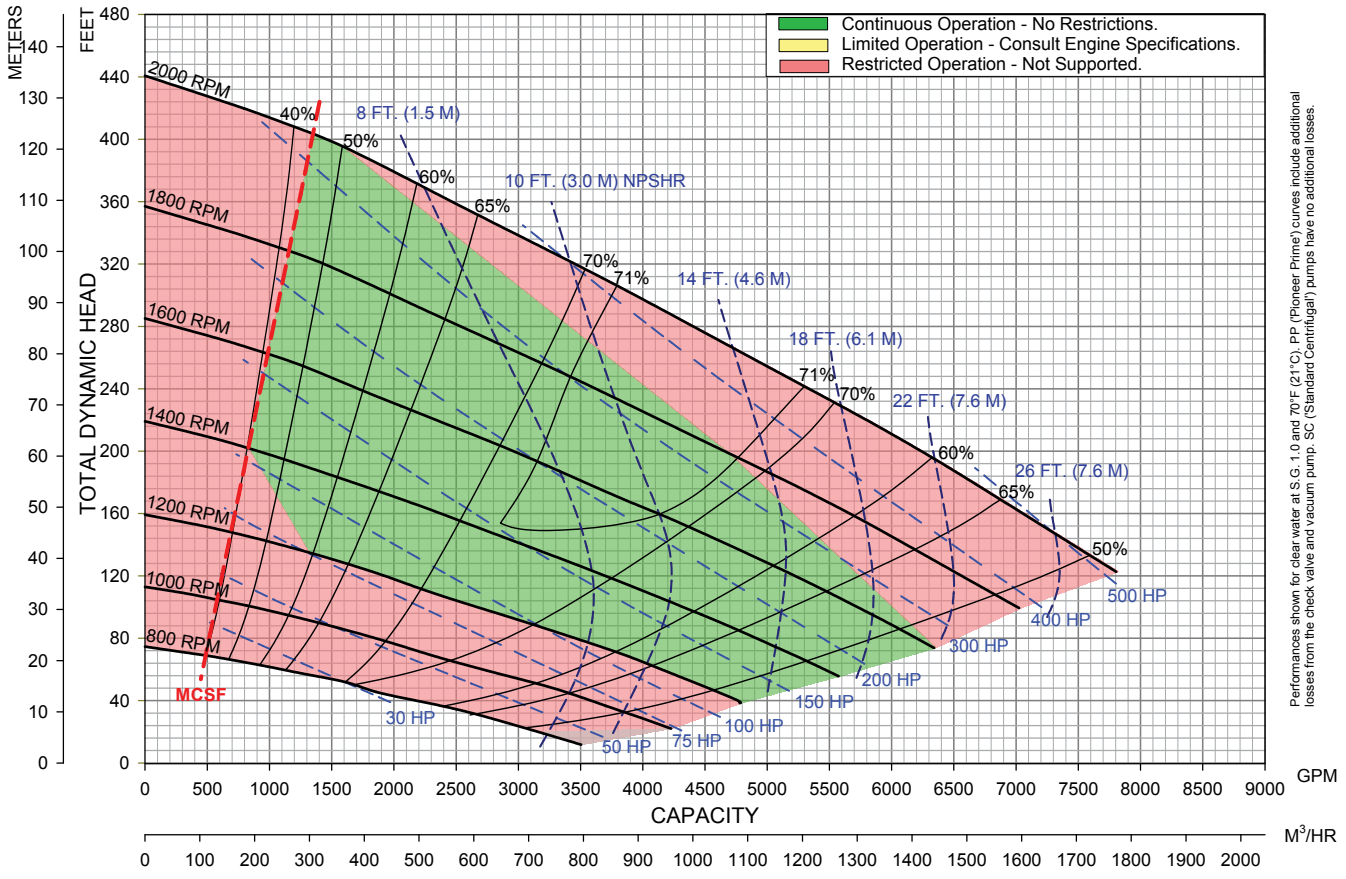
PERFORMANCE CURVE